REVISIONS				
REV.	ZONE	DESCRIPTION	DATE	APPV'D

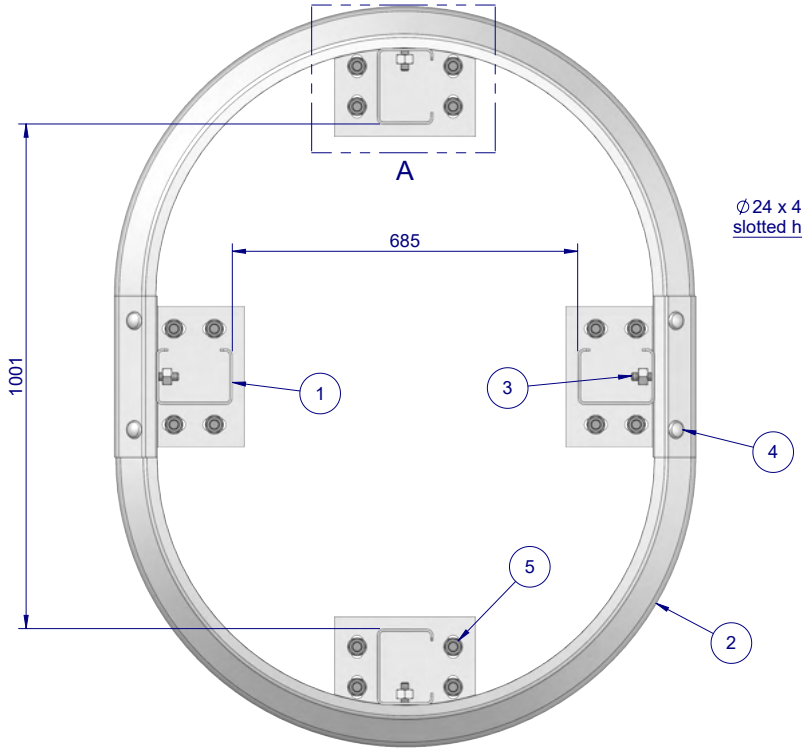

PLAN VIEW

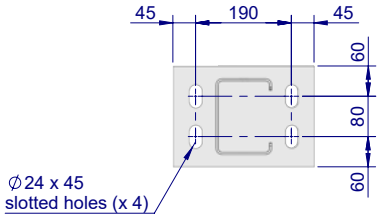

Detail A
(Baseplate)

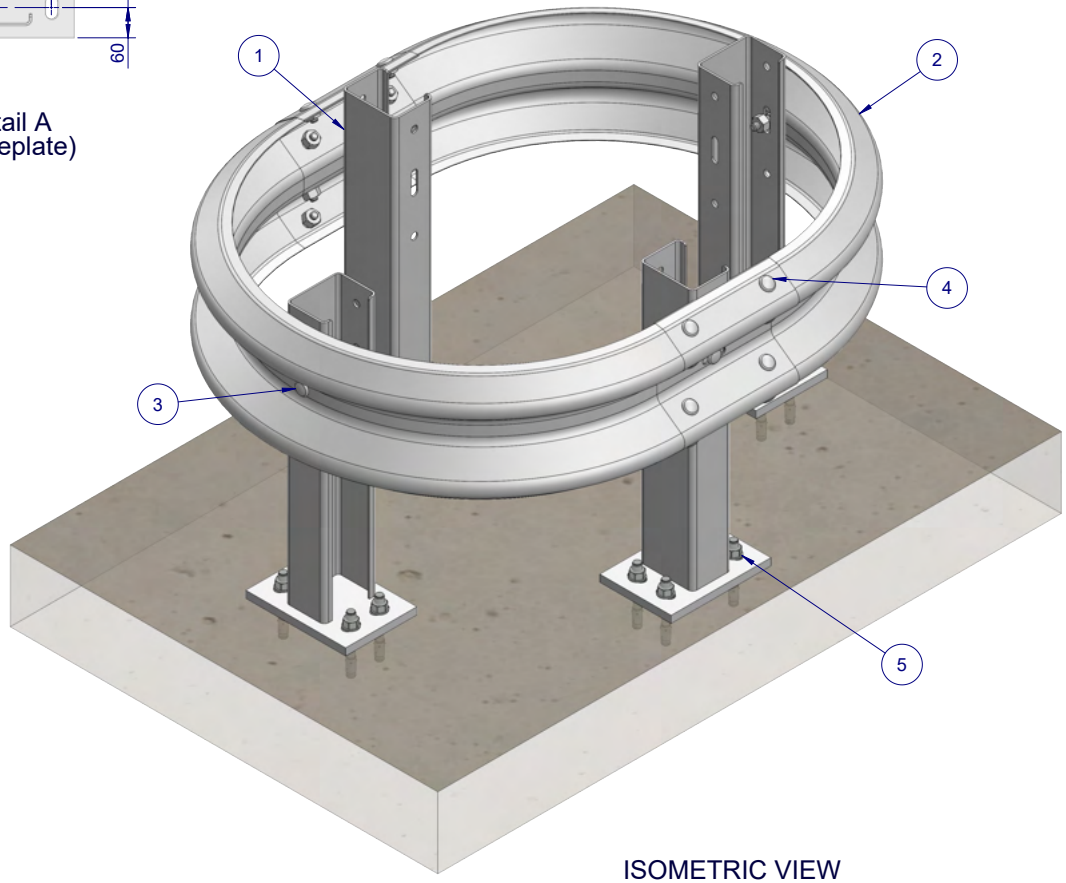

ISOMETRIC VIEW

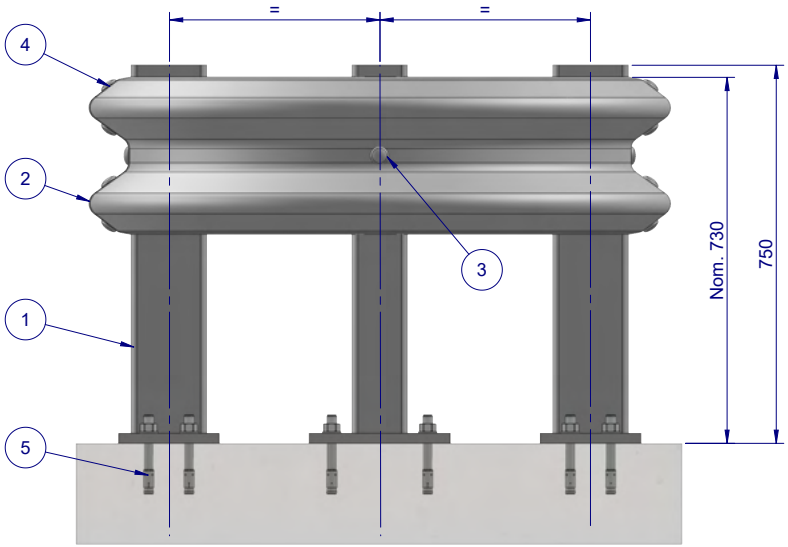

ELEVATION VIEW

Item No.	Part Number	Description
1	GR-PB-CS-0750-AG	C-Post on Baseplate
2	GR-WB-CV-2000-RG	2.0m W-Beam, Curved to a Half-Ring
3	GR-FS-16-0050-MG	M16x50 Mushroom Head Post Bolt & Oversize Nut, Class 4.6
4	GR-FS-16-0032-MG	M16x32 Mushroom Head Splice Bolt & Oversize Nut, Class 8.8
5	GR-FS-20-0160-HG	M20x160 Anchor

MATERIAL:

FINISH:

STATUS	NAME	DATE
DRAWN	J. An	10/01/2023
CHK'D	T. Colquhoun	10/01/2023
APPV'D	H. Wallace	10/01/2023

SafeDirection
CRASH BARRIER SOLUTIONS

COPYRIGHT All rights reserved ABN: 53 156 459 684
These drawings, plans and specifications and the copyright therein are the properties of Safe Direction Pty Ltd, and must not be used, reproduced or copied wholly or in part without written permission.

U.N.O: TOLARANCES: ± 1mm
ALL DIMENSIONS ARE IN: mm

THIRD ANGLE PROJECTION

STATUS: **APPROVED**

TITLE:
Car Park Barrier
Column Guard with C-Posts Type 1

General Arrangement

DWG NO. SD-CP-08000

REVISION: A

SHEET SIZE A4

WEIGHT:

DO NOT SCALE DRAWING

SCALE: 1:15

SHEET 1 of 1

C:\Temp\TC\SD\SD-CP-08000 - Column Guard with C-Posts Type 1\ Tuesday, 31 January 2023 12:39:57 PM