REVISIONS				
REV.	ZONE	DESCRIPTION	DATE	APPV'D

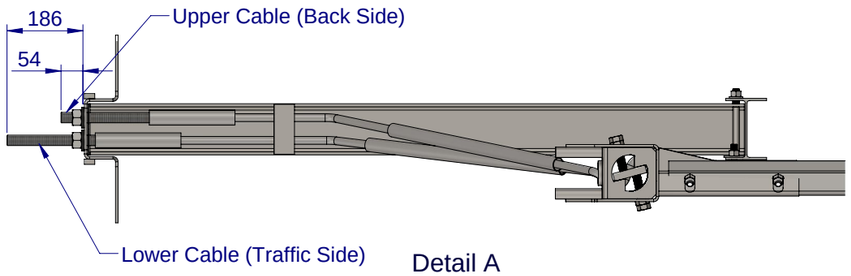

Detail A

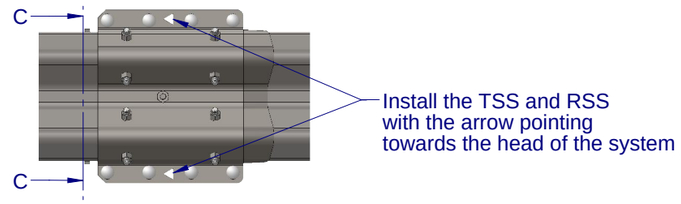

Detail B

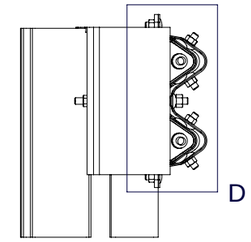

Section C - C

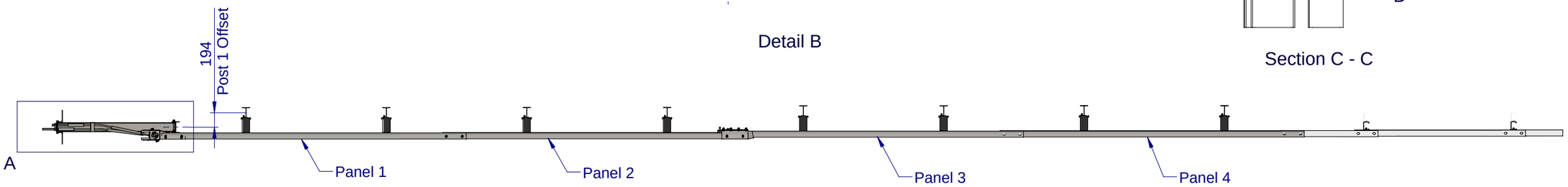

Plan View

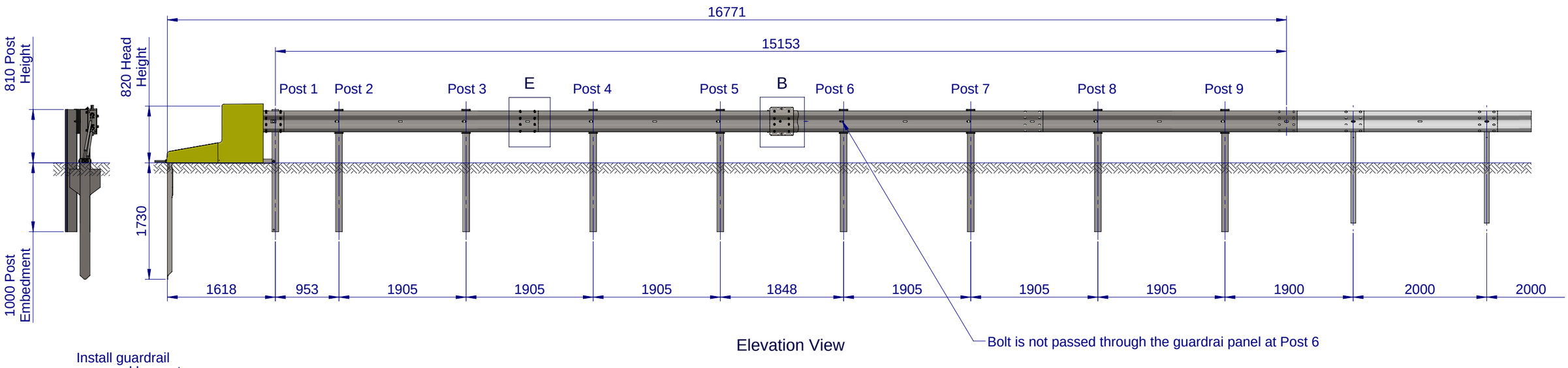

Elevation View

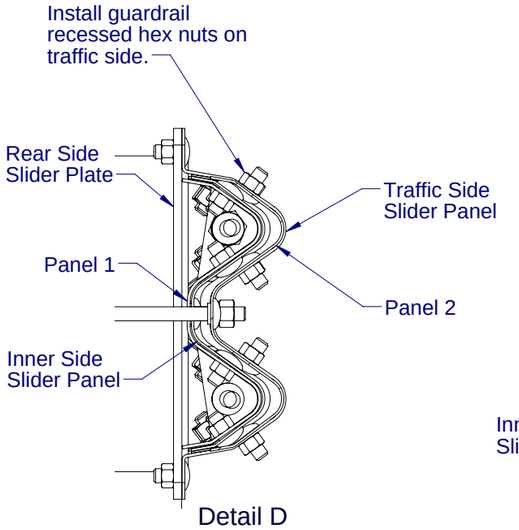

Detail D

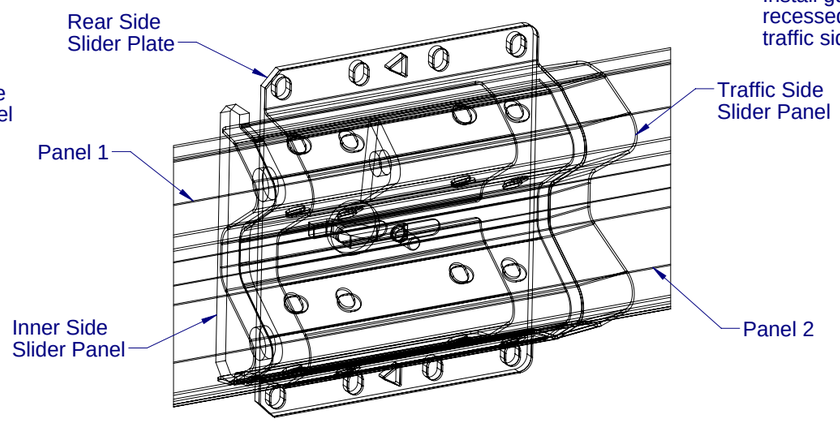

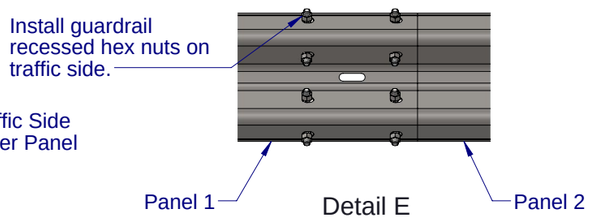

Detail E

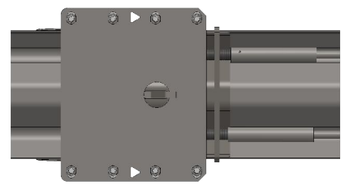

Detail B
Rear View

QR?RSQ	L?KC	B?RC
BP?UL	H, ?I	06-.4-0.01
AFI\B	R, Amjosfmsl	06-.4-0.01
?NNT\B	F, U_jj_ac	06-.4-0.01

SafeDirection CRASH BARRIER SOLUTIONS

Road Barriers - Sentry W-Beam

a ! · π¢Ŝy'ãλ2y'¢ [πo ¢ŜℕY'λyl·f ! LJLJℕ2l·ŎK {λŘŜ

General Arrangement

SD-RB-05013

A3

APPROVED

ITEM	PART NUMBER	DESCRIPTION	QTY
1	GE-EF-MX-0130-AG	SOIL ANCHOR, GALVANIZED	1
2	GE-EF-MX-0131-AG	GOUNDSTRUT, GALVANIZED	1
3	GE-EF-MX-MAXT-AG	IMPACT HEAD INCLUDING FRICTION PLATE/BOLTS	1
4	GE-PG-IS-1830-DG	MAXTENSION POST 1	1
5	GE-EF-MX-0120-AG	TSS PANEL, GALVANIZED	1
6	GE-EF-MX-0122-AG	ISS PANEL, GALVANIZED	1
7	GE-EF-MX-0120-AG	RSS PLATE, GALVANIZED	1
8	GE-EF-MX-9595-CG	CABLE ASSEMBLY	2
9	GE-EF-MX-MAXT-AY	MAX YELLOW NOSE	1
10	GE-PG-IS-1800-AG	LINE POST	8
11	GE-WB-SR-3810-DG	W-BEAM 3.81m MAXTENSION W BEAM	4
12	GE-BL-SS-0310-BS	W-BEAM COMPOSITE BLOCKOUT	8
13	GR-WB-SR-1000-AG	W-BEAM 1.0 meter RAIL	1
14	GE-EF-MX-0123-AG	TOOTH, GEOMET	1
15	GE-FS-16-7545-AG	75X45X5 RECTANGULAR WASHER GALV	1
16	GR-FS-12-5050-AG	50x50x3 GALV SQUARE WASHER	1
17	GR-FS-16-0050-MG	M16X50mm POST BOLT&NUT	1
18	GE-FS-16-0000-AG	M16 WASHER GALV	2
19	GE-FS-16-0200-HG	M16X200 HEX HEAD BOLT&NUT GALV	1
20	GE-FS-58-0011-HG	TOOTH NUT RECESSED 5/8-11	1
21	GR-FS-12-0032-TG	14-24x32mm TEKSCREW GALV	4
22	GE-EF-MX-0353-AG	PLASTIC NUT COVER	25
23	GR-FS-16-0032-MG	M16x32MM SPICE BOLT&NUT GALV	56
24	GR-FS-16-0240-MG	M16x240 CUP HEAD BOLT&NUT GALV	8

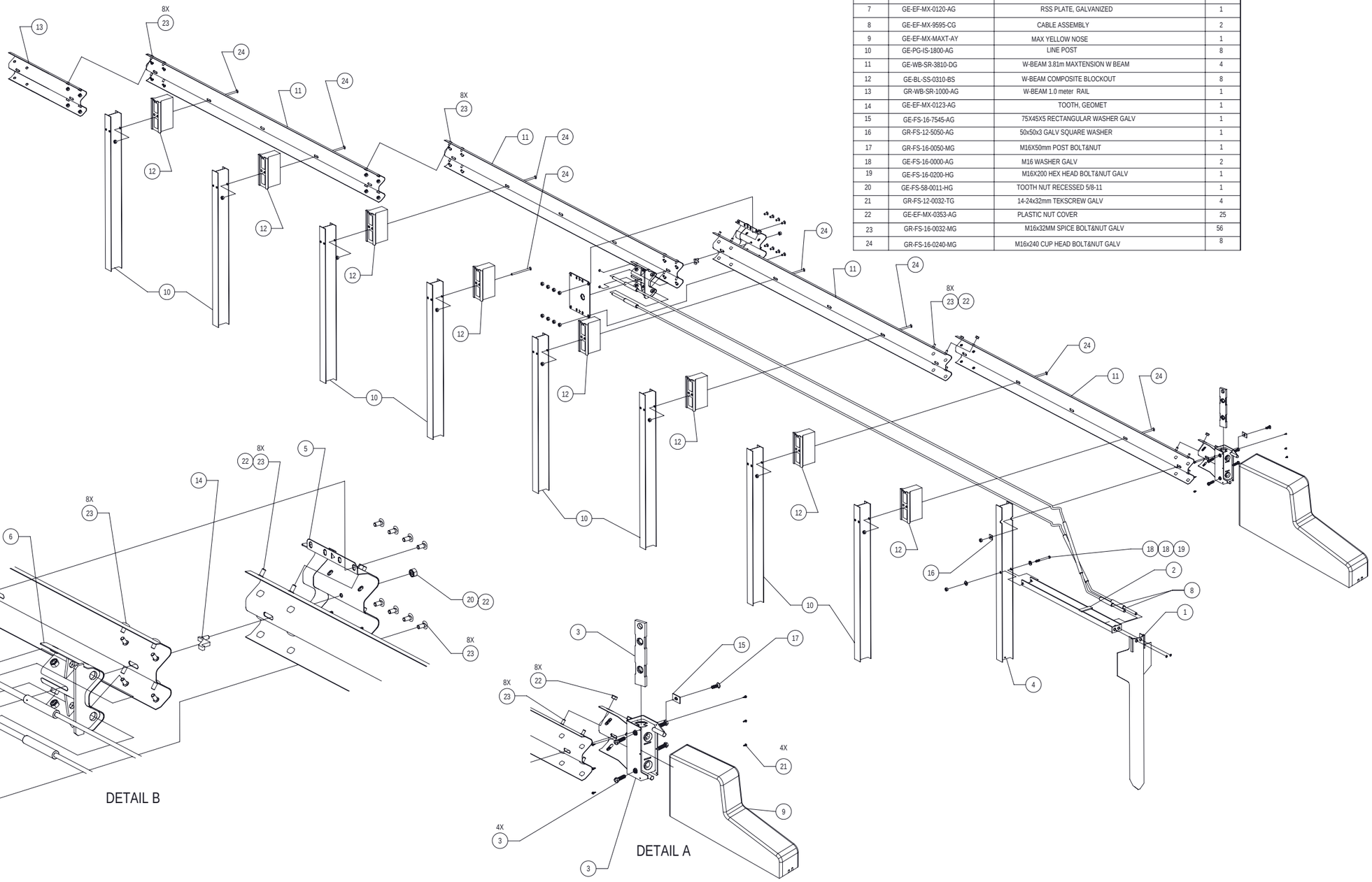

K?RCP?JI

D?LRQFI

QR?RSQ	L?KC	B?RC
BP?UL	H, ?I	06-.4-0.01
AF1?B	R, Amjosfmsl	06-.4-0.01
?NNT?B	F, U_jj_ac	06-.4-0.01

SafeDirection
CRASH BARRIER SOLUTIONS

AMNWPEER ?jj qefrq pcqcptcb ?@Lj 31 /34 237 462
Rfcqc bp_ujleq" nj_lq _lb qncajdja_rmlq _lb rfc amnwpefr rfcpcjl
_pc rfc rqmncprcjq ˝nd Q dc Bipcarjm1 Nnu ˝Jrb' _lb ksqr lmr ˝c sqcb'
fpcrqntbsacb np amnjcb uˇfhjjw np ;l n_pr uprfmsr˝uprrcl ncpkjqqjml,

SLJCOQ MRFCPUIQC QNCADICBI
ECLCP?JJ RMJ?P?PLACQI ±..3kk
?JJ BIKCLQIMLQ ?PC ˝LJ kk

RFIPB ?LEJC
NPMMCARIML

QR?RSQI APPROVED

R?RJCI

Road Barriers - Sentry W-Beam

a ! · π¢Ŝyǎλ2y˝¢ [πo ¢ŜNYλyl·f
! LJLJNN2I·ÖK {λŘŜ

BUE RWNCI

General Arrangement

BUE LM,	PCT?QMLI	QFCCR QJXC
SD-RB-05013	A	A3

UCIEFRI | BM LMR QA?JC BP?UELE | QA?JCI | QFCCR 0 md 1

AIZQBQWBZQBZ?QQ:x jwzQB+P@ Pn_b @_pqcqaZQB+P@+.3... Rcqkq1l_jqZQB+P@+.3.?1 + K_v Rc1qjm1 K31 11ak?V K31 2 Ktrb_ir 1 rsqir 0.01 //4112 NK

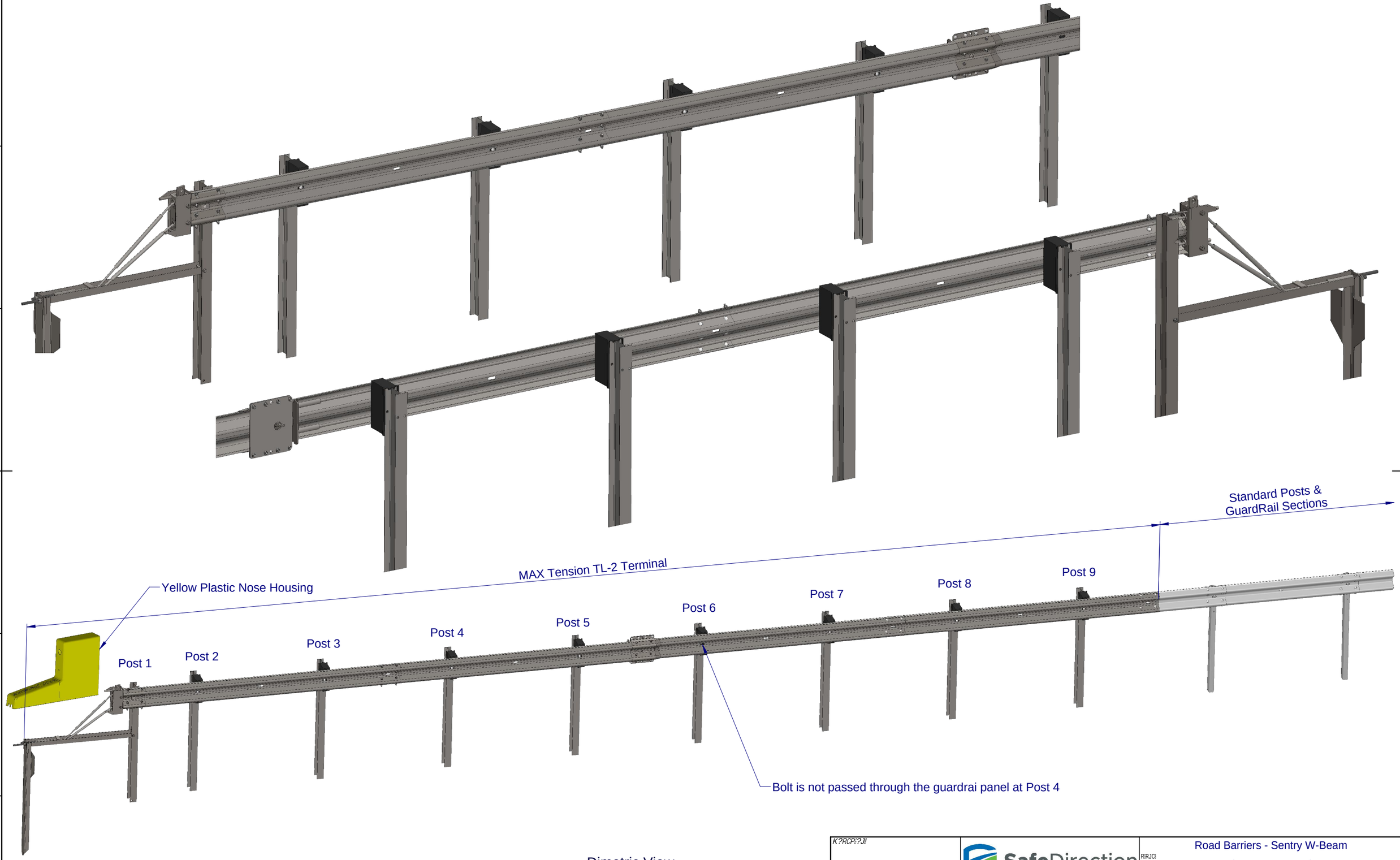

Dimetric View

K?RCP?JI

D?LIQFI

QR?RSQI	L?KC	B?RC
BP?UL	H, ?I	06-.4-0.01
AFI?B	R, Amjosfmsl	06-.4-0.01
?NNT?B	F, U_jj_ac	06-.4-0.01

SafeDirection
CRASH BARRIER SOLUTIONS

AMNWPIEFR ?ij qefrq pcqcptcb ?@LI 31 /34 237 462
Rfcqc bp_ujfeq" nj_fq _fb qncajda_rjmlq _fb rfc amnwpefr rfcpcl
_pc rfc rjmmcprpcq nd Q dc Bjpcarjmi Nrw Jrtp" _fb ksqr fnr _c sjpcb"
pcnpmbsacb mp amnjcb uJfmjjw mp ji n_pr ujrfmsr"upjrrcl ncpkjqqjmi.

SLJCQO MRFCPUIQC QNCAIDCBI
ECLOP?JI RIUJ?P?LAQQI
?JJ BIKCLQIMLQ ?PC'ILI

± ..3kk
kk

RFIPB ?LEJC
NPMHCARIML

QR?RSQI

APPROVED

Road Barriers - Sentry W-Beam

RIRJCI

a ! · π¢Ŝyãλ2y¢[πo ¢ŜNYλyI·f
! LJLJNZI·ÔK {λŘŜ

BUE RWNCI

General Arrangement

BUE LM,	PCTIQMLI	QFCCR QXC
SD-RB-05013	A	A3

UCIEFRI

BM LMR QA?JC BP?UILE | QA?JCI /ß3. | QFCCR 1 md 1

AIQJBJWBZQBZ?QJCk jwZQB+P|j Pb_b ij_pqcqcZQB+P|j+.3... RcpkJ|_jqZQB+P|j+.3.?1 + K_v RcIqjmI RJI I1?K?V RJI'z Knfb_w' 1 rsjw 0.01 //ß412 NK